FEATURES

REVISION HISTORY

DEVICE ORDER INFORMATION

ABSOLUTE MAXIMUM RATINGS

			o
			o

PIN CONFIGURATION

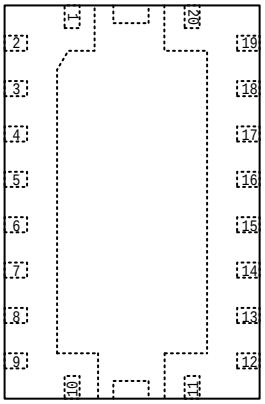

PIN FUNCTIONS

THERMAL INFORMATION

TYPICAL CHARACTERISTICS

FUNCTIONAL BLOCK DIAGRAM

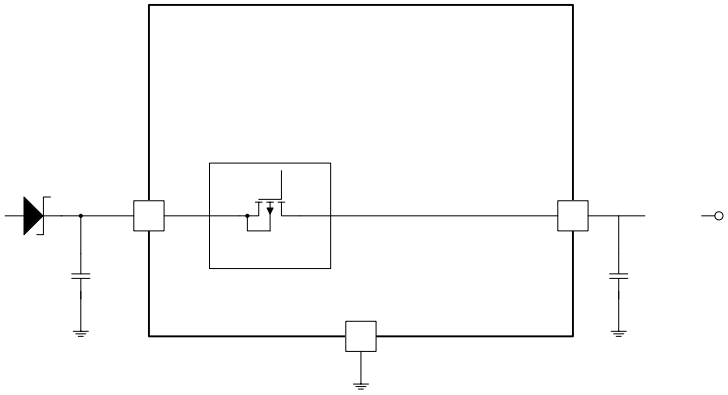

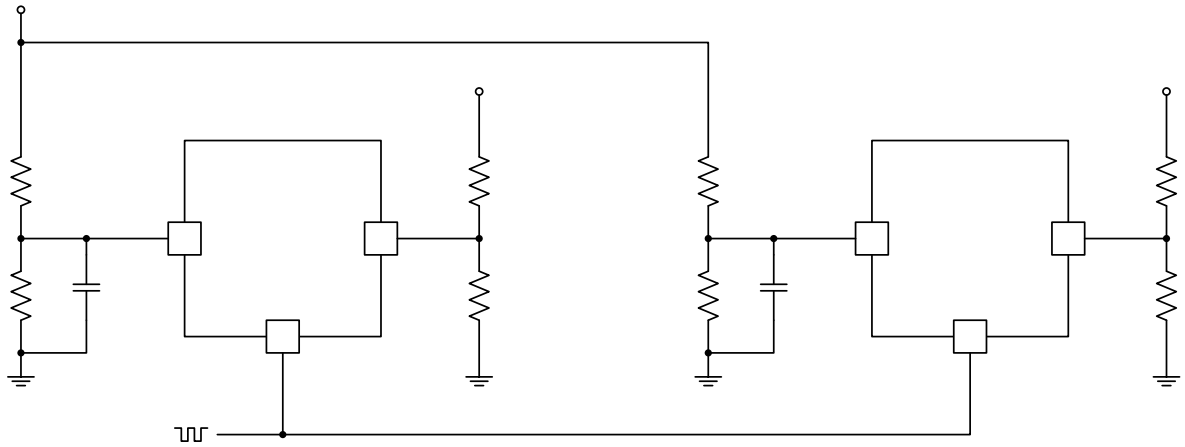

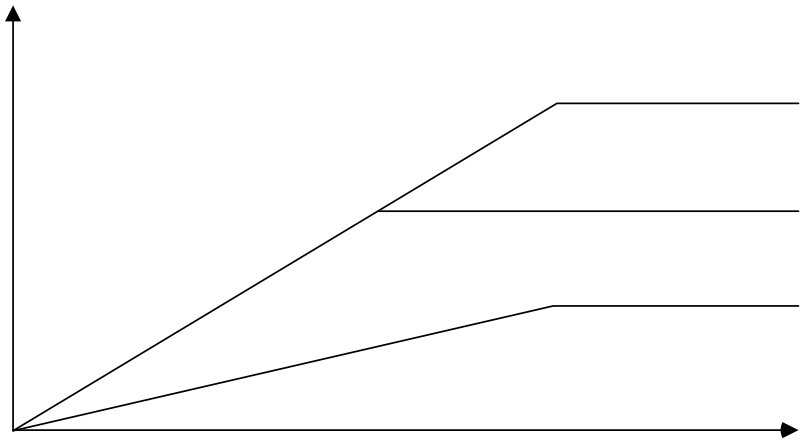

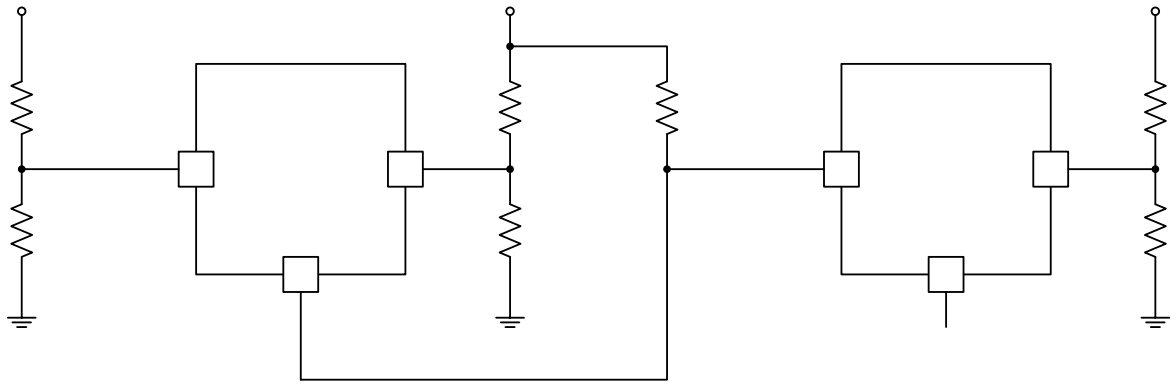

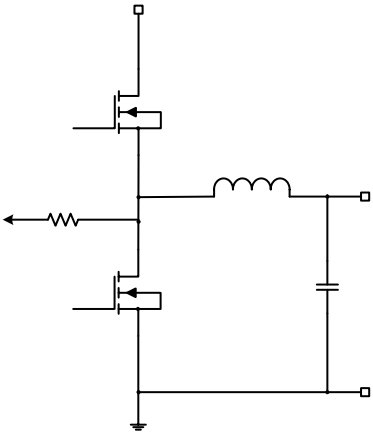

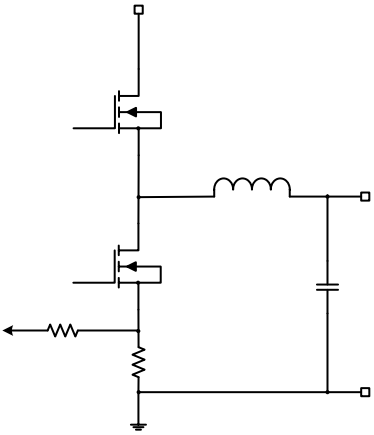

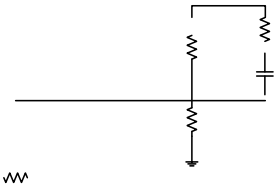

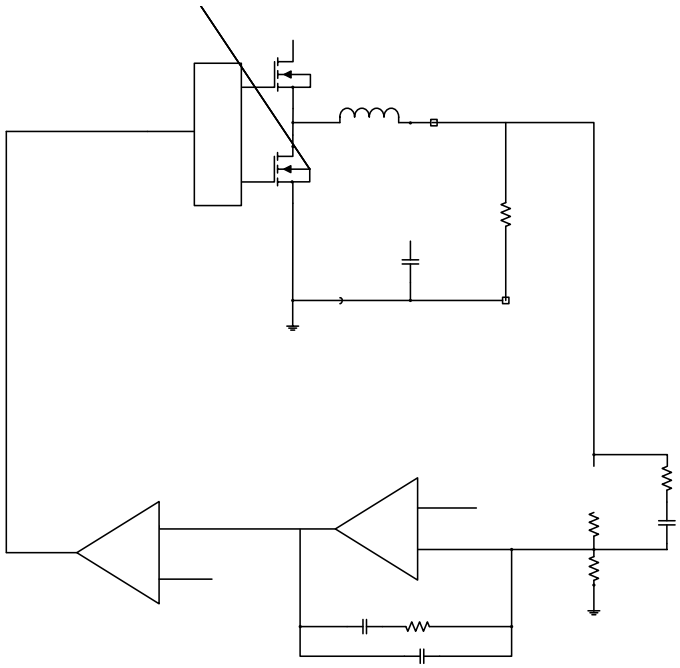

APPLICATION INFORMATION

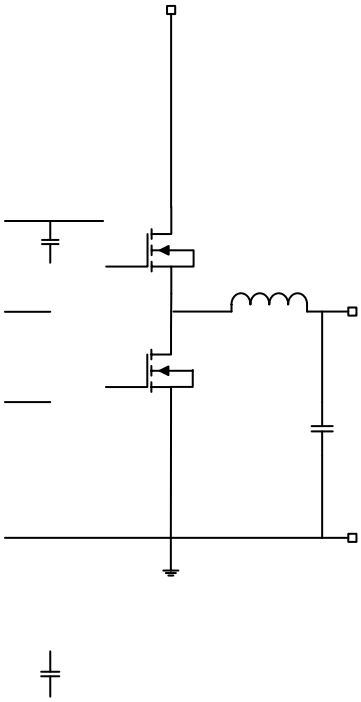

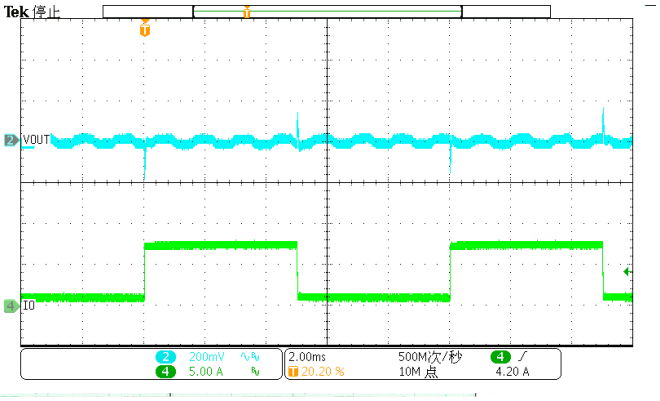
Tek 停止
VOUT
IO
200mV
5.00 A
2.00ms
20.20 %
500M次/秒
10M 点
4.20 A

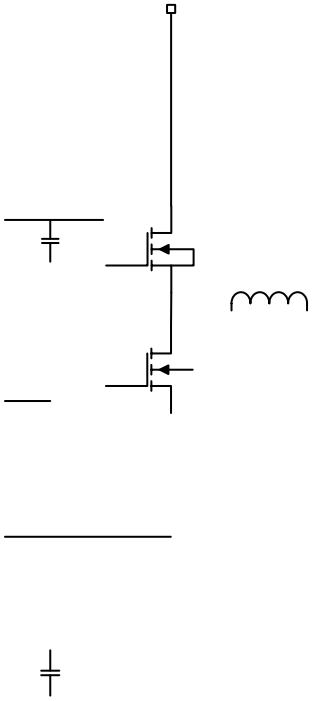

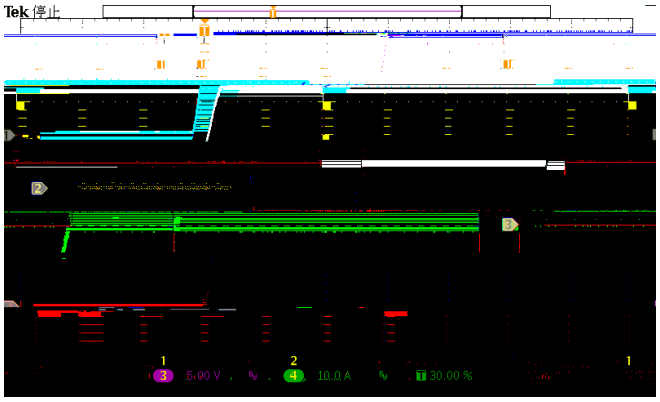
Tek 停止
5.00 V
10.0 A
30.00 %

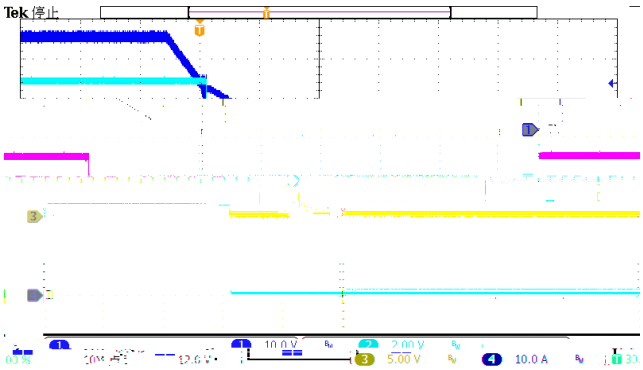
Tek 停止
10.0 V
2.00 V
5.00 V
10.0 A

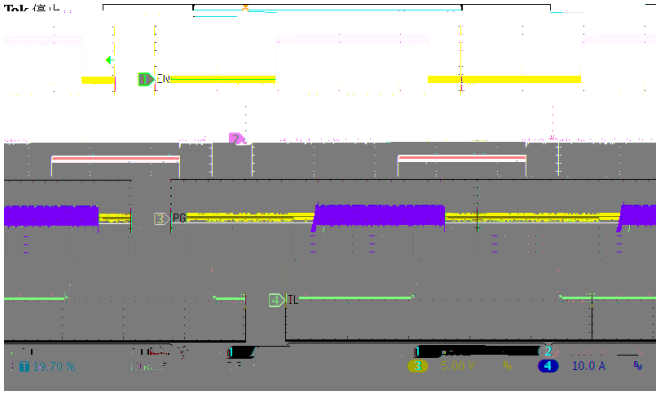
EN
PG
IL
19.70 %
5.00 V
10.0 A

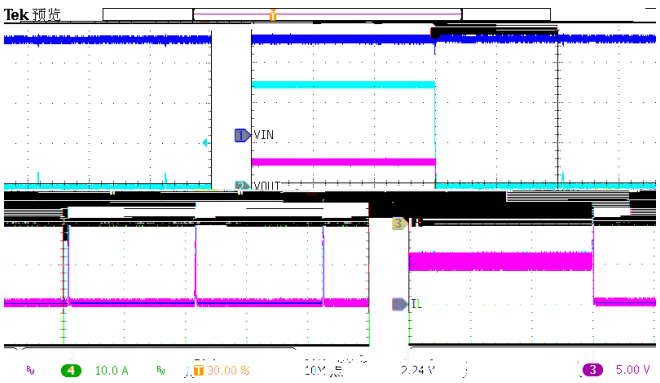
Tek 预览
VIN
VOUT
IL
10.0 A
30.00 %
5.00 V

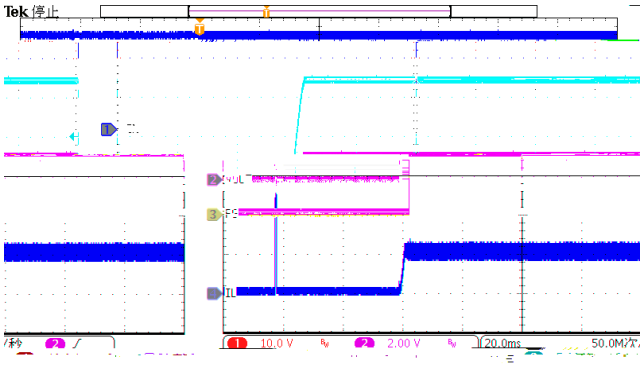
Tek 停止
VOUT
FB
IL
10.0 V
2.00 V
20.0ms
50.0M/s

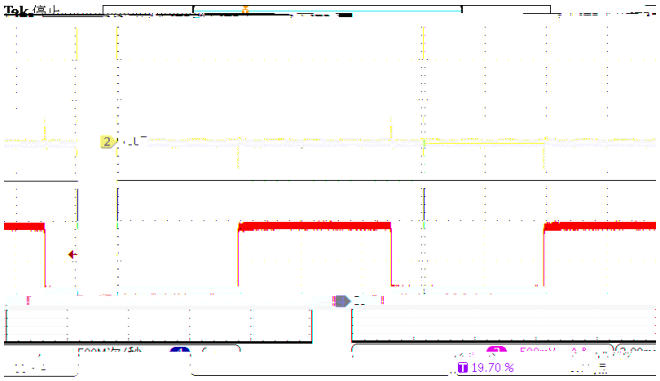
19.70 %

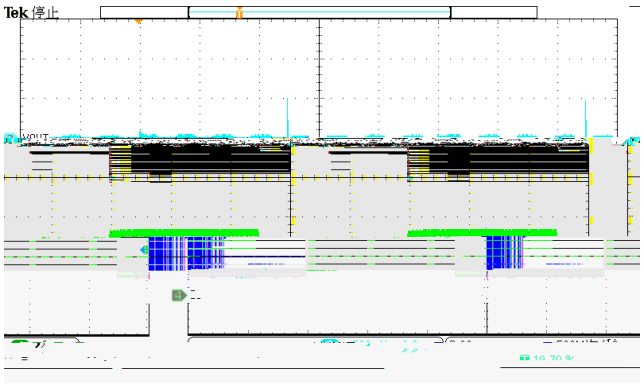
Tek 停止
VOUT

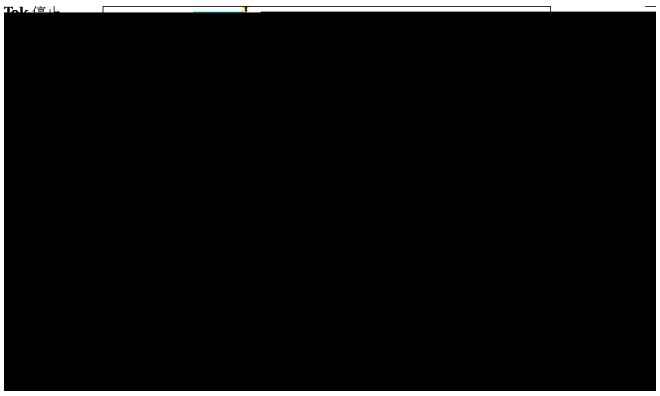

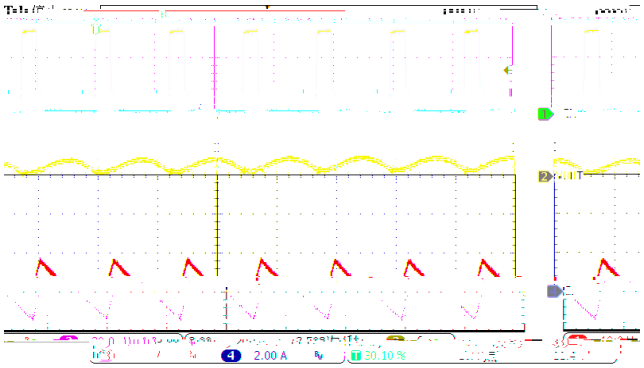
2.00 A
30.10 %

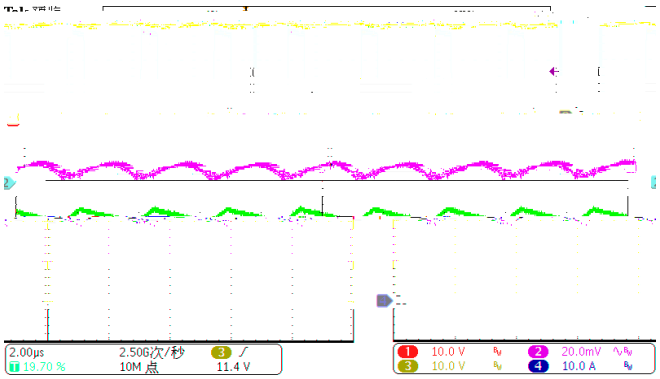
2.00µs
2.50G次/秒
10M 点
19.70 %
11.4 V
10.0 V
20.0mV
10.0 V
10.0 A

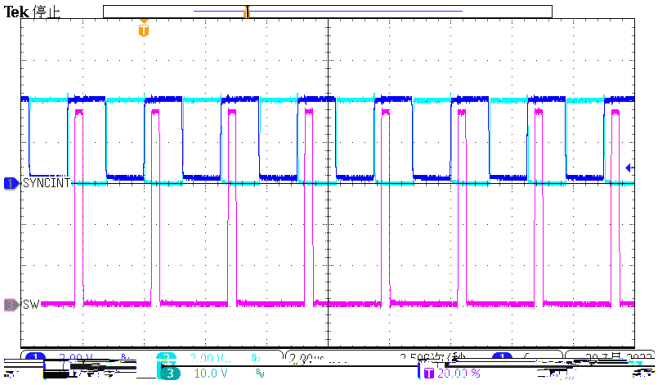
Tek 停止
SYNCINT
SW
10.0 V
20.00 %

Vout	Lм	COUT	$R_{FBм}$	$R_{FBн}$	$R_{см}$	$C_{см}$	$C_{сн}$	$R_{сн}$	$C_{со}$
pV	o.ouH	p*птuF	т.утK	м.pK	н.поK	мpnF	оолpF	ммл	o.onF
мнV	c.yuH	п*птuF	нмK	м.pK	ммK	п.тnF	сypF	нлл	м.pnF
нпV	c.yuH	п*птuF	по.нK	м.pK	но.нK	н.нnF	оopF	пнн	сулpF

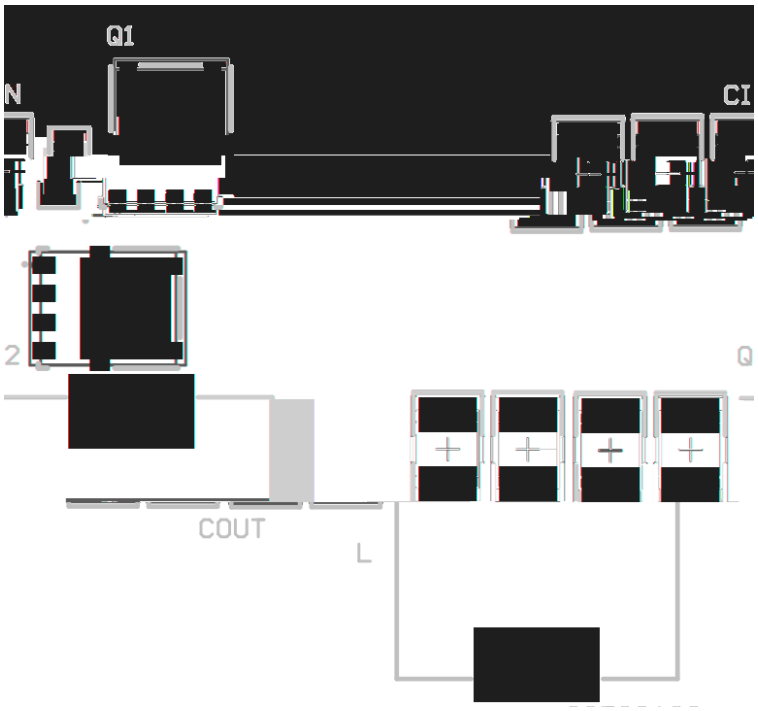
Q1
N
CI
2
Q
COUT
L

PACKAGE INFORMATION
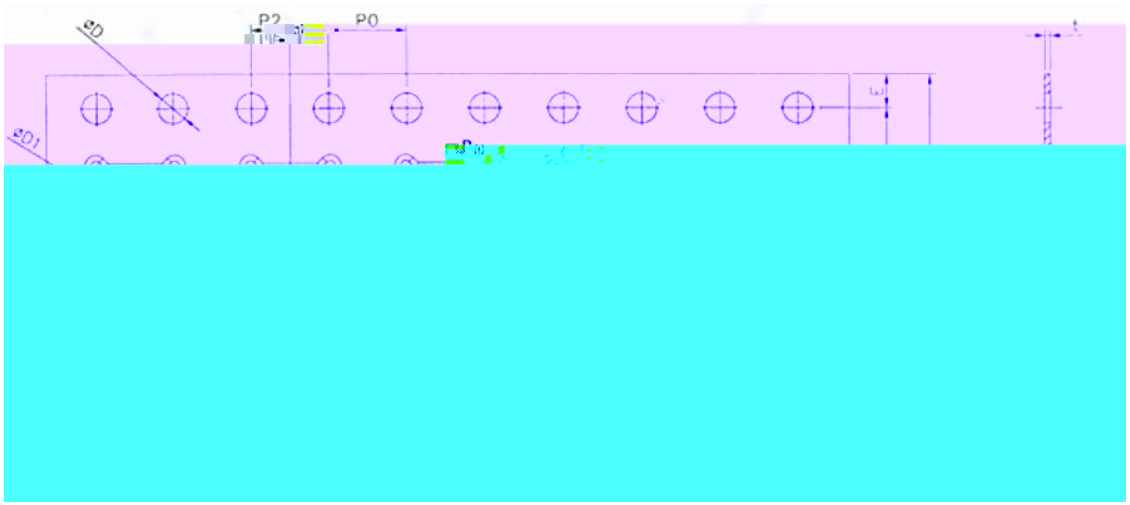
TAPE AND REEL INFORMATION