REVISION HISTORY

DEVICE ORDER INFORMATION

25'(5$%/('(9,&(	3$&.$*,1* 7<3(	67$1'$5' 3$&. 47<	3$&.$*(0$5.,1*	3,16	3$&.$*('(6&5,37,2	06/

ABSOLUTE MAXIMUM RATINGS

Over operating free-air temperature unless otherwise noted(1)

DESCRIPTION	MIN	MAX2F

PIN CONFIGURATION

ESD RATINGS

3$5$0(7(5	'(),1,7,21	0,1	0$;	81,7

(1)

6<0%2/ 3$5$0(7(5

FUNCTIONAL BLOCK DIAGRAM

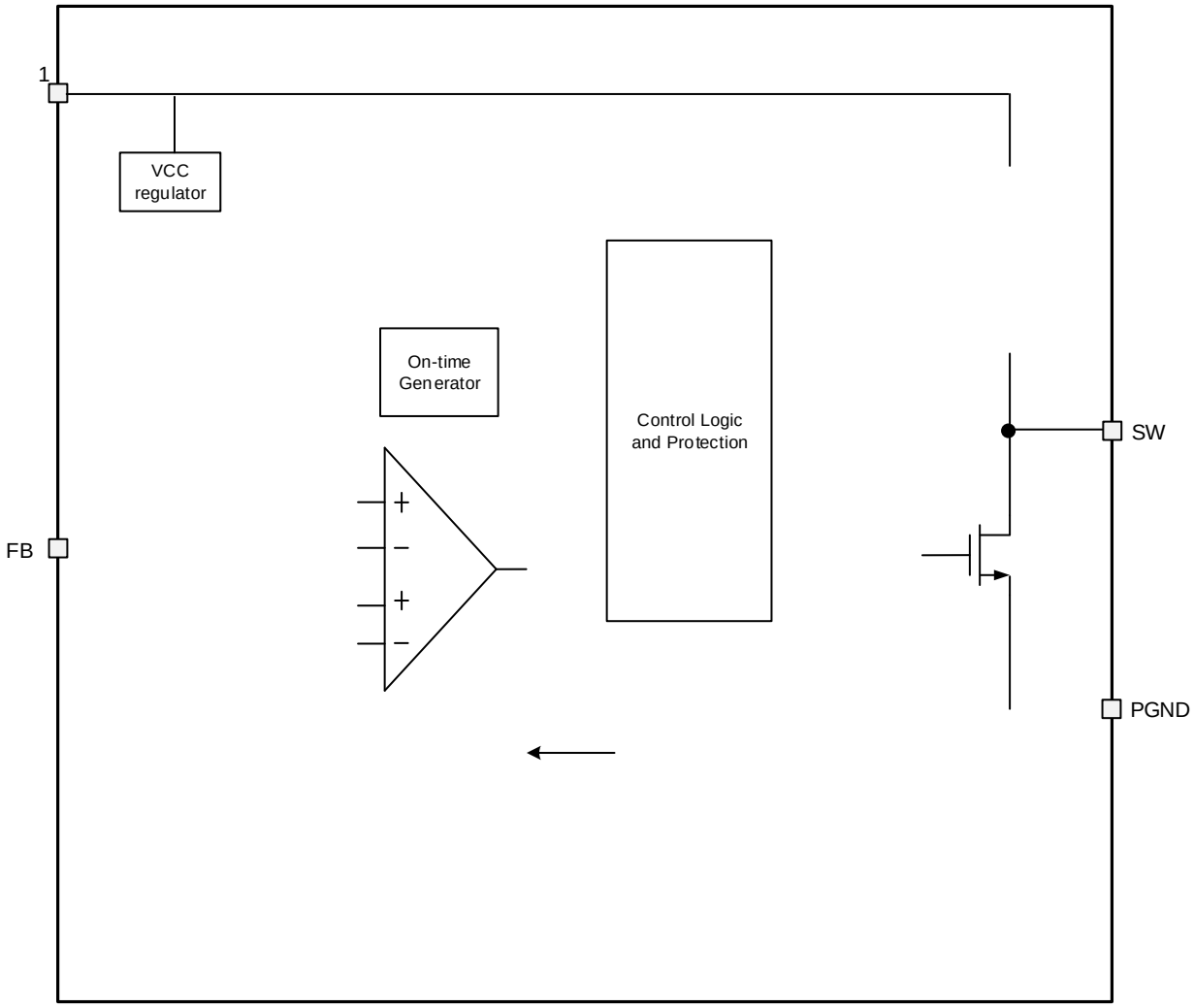

)LJXUH)XQFWLRQDO %ORFN 'LDJ

OPERATION

2 Y H U Y L H Z

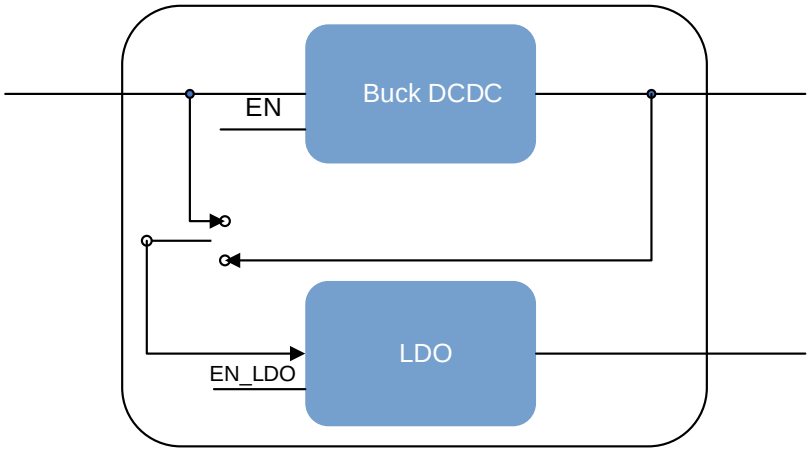

)LJXUH 2 SRZHU $DWKLWHFWXUH

3XOVH)UHTXHQF\ 0RGXODWLRQ 0RGXODWLRQ V860

)RUFHG 3XOVH :LGWK 0RGXODWLRQ)3:0 PRGH

(QDEOH 8DQGRO W/DJH NR7KW UHVKROG

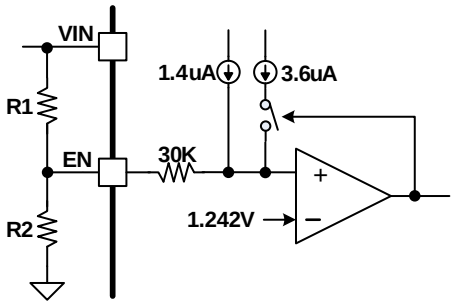

Û

2XWSXW 9ROWDJH

8QGHUYROWDJH 3URWHFWLRQ

2YHU YROWDJH 3URWHFWLRQ

7KHUPDO 6KXWGRZQ

APPLICATIONINFORMATION

7\SLFDO $SSOLFDWLRQ

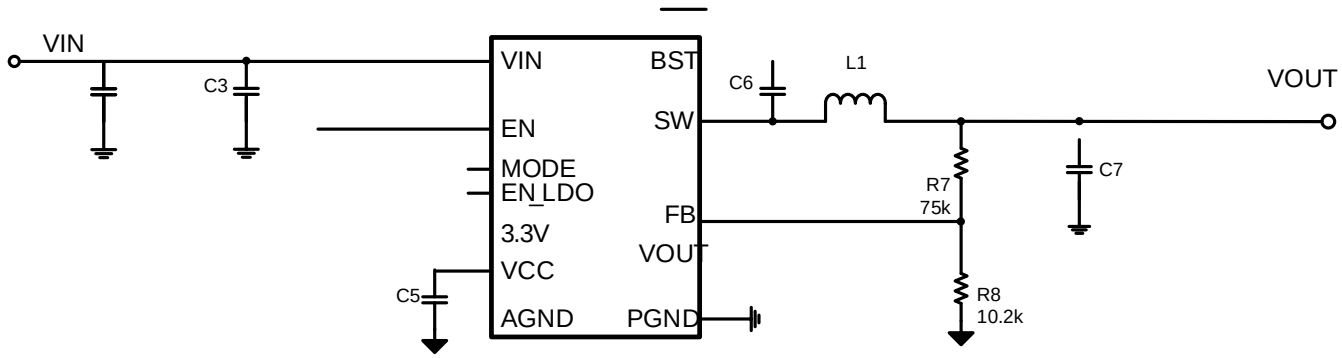

)LJXUH 9 ,QSXW$ 29XWSXW

'HVLJQ3DUDPHWHUV

Design Parameters	Example Value
Input Voltage	12V
Output Voltage	5V
Output Current	6A
Output voltage ripple (peak to peak)	50mV
Switching Frequency	400kHz

,QSXW &DSDFLWRU 6HOHFWLRQ

,QGXFWRU 6HOHFWLRQ

2XWSXW &DSDFLWRU 6HOHFWLRQ

$SSOLFDWLRQ :DYHIRUPV FRQWLQXHG

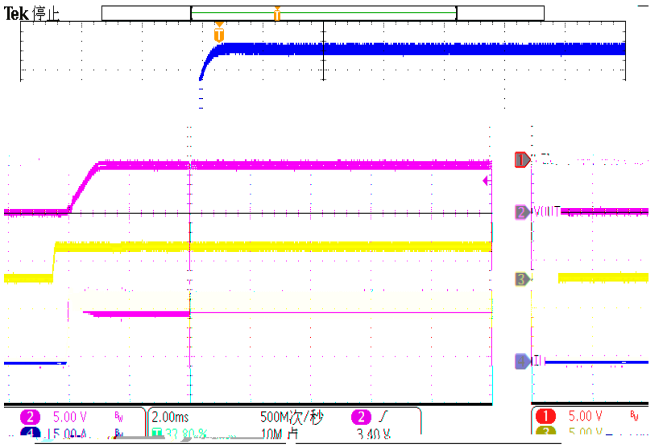

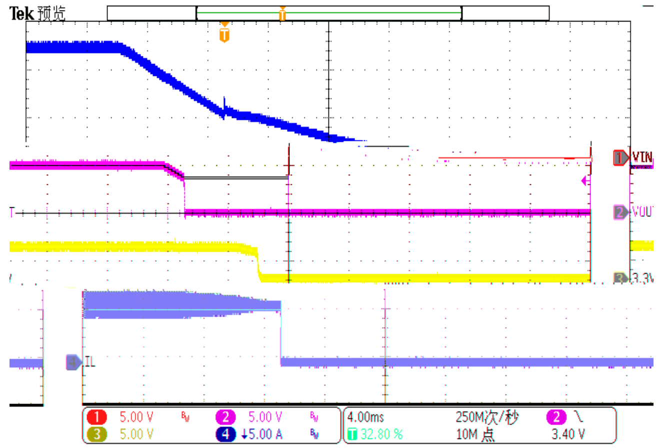

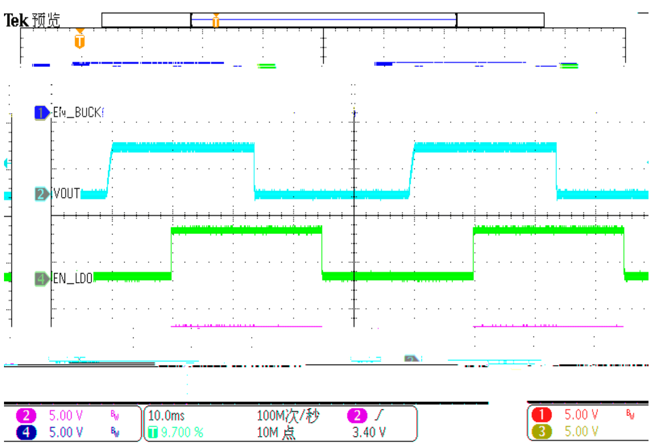

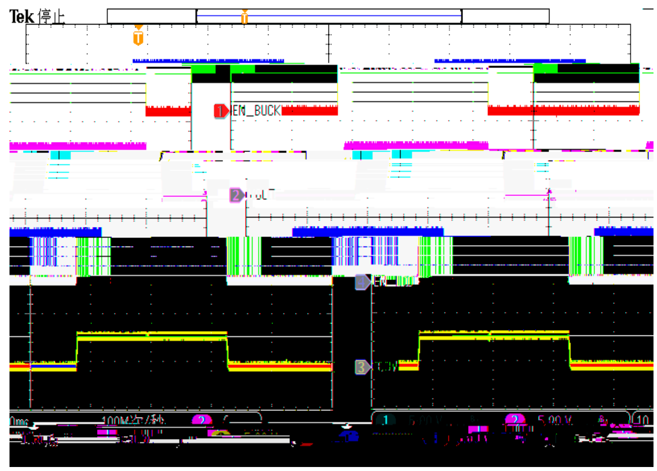

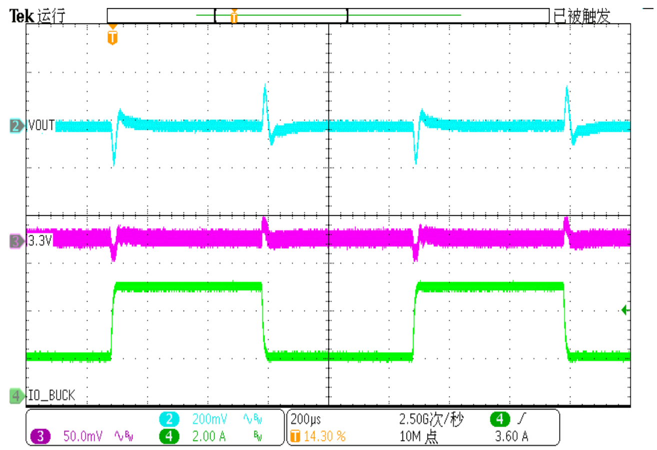

$SSOLFDWLRQ :DYHIRUPV

PACKAGE INFORMATION

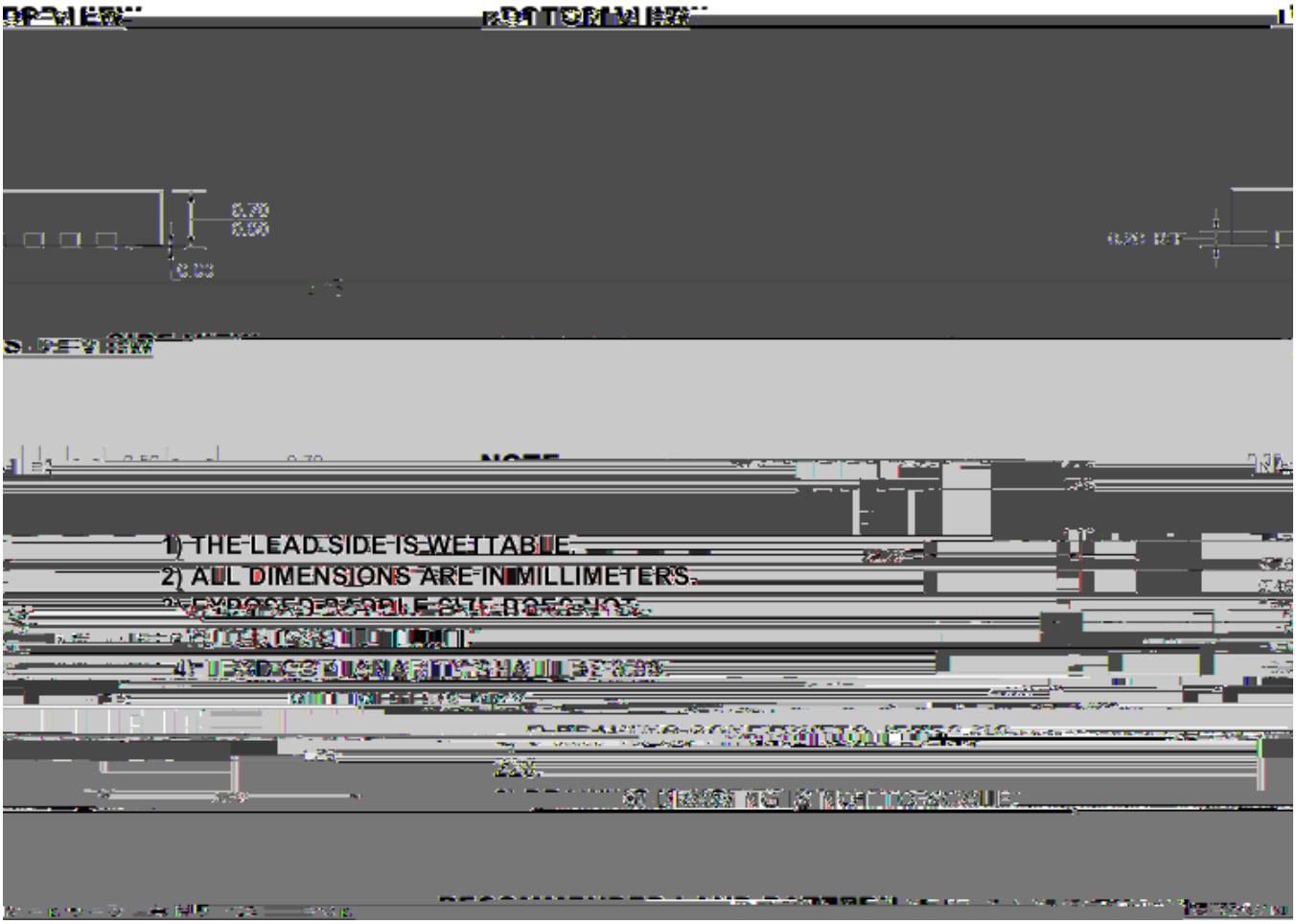
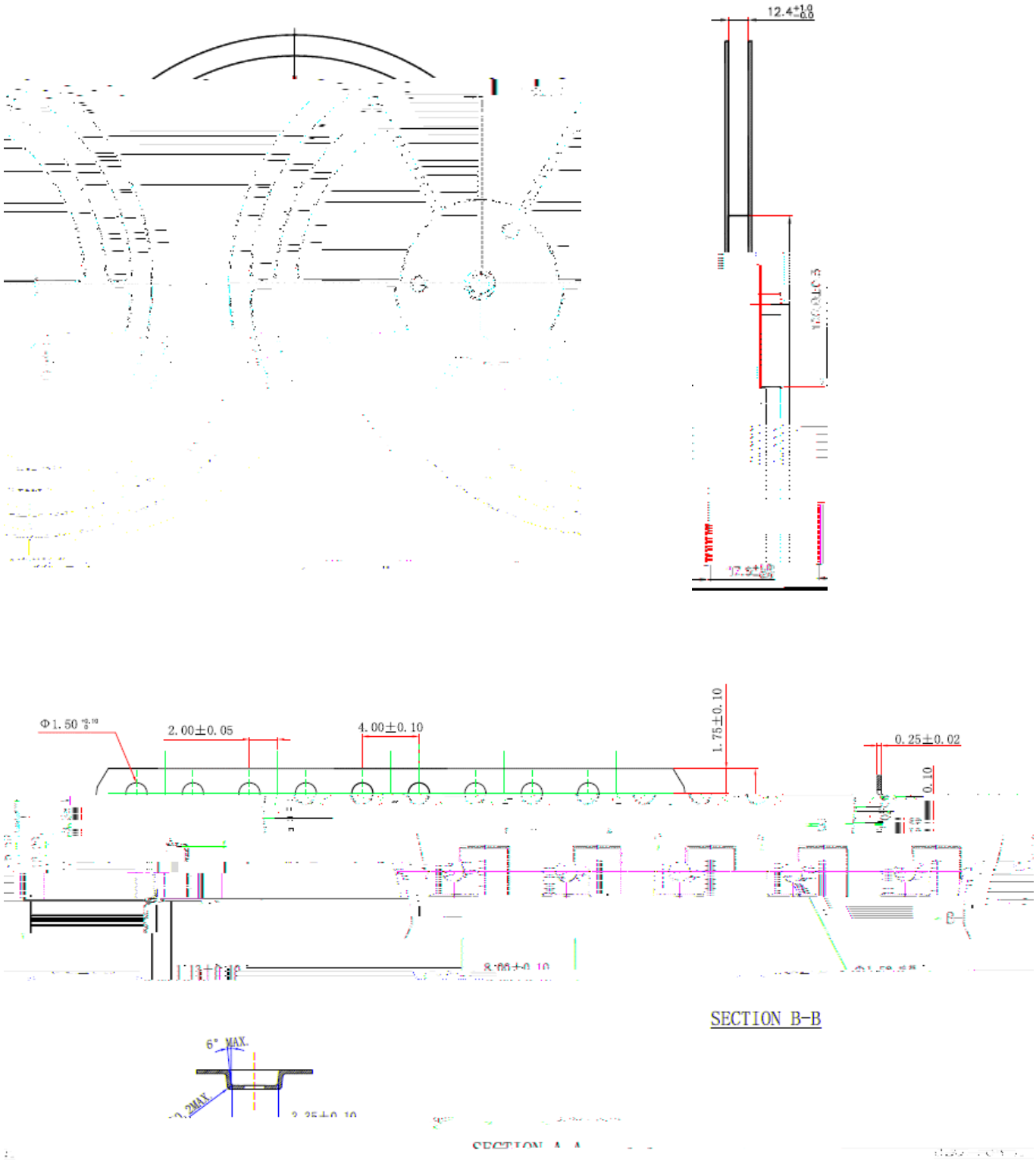
TAPE AND REEL INFORMATION